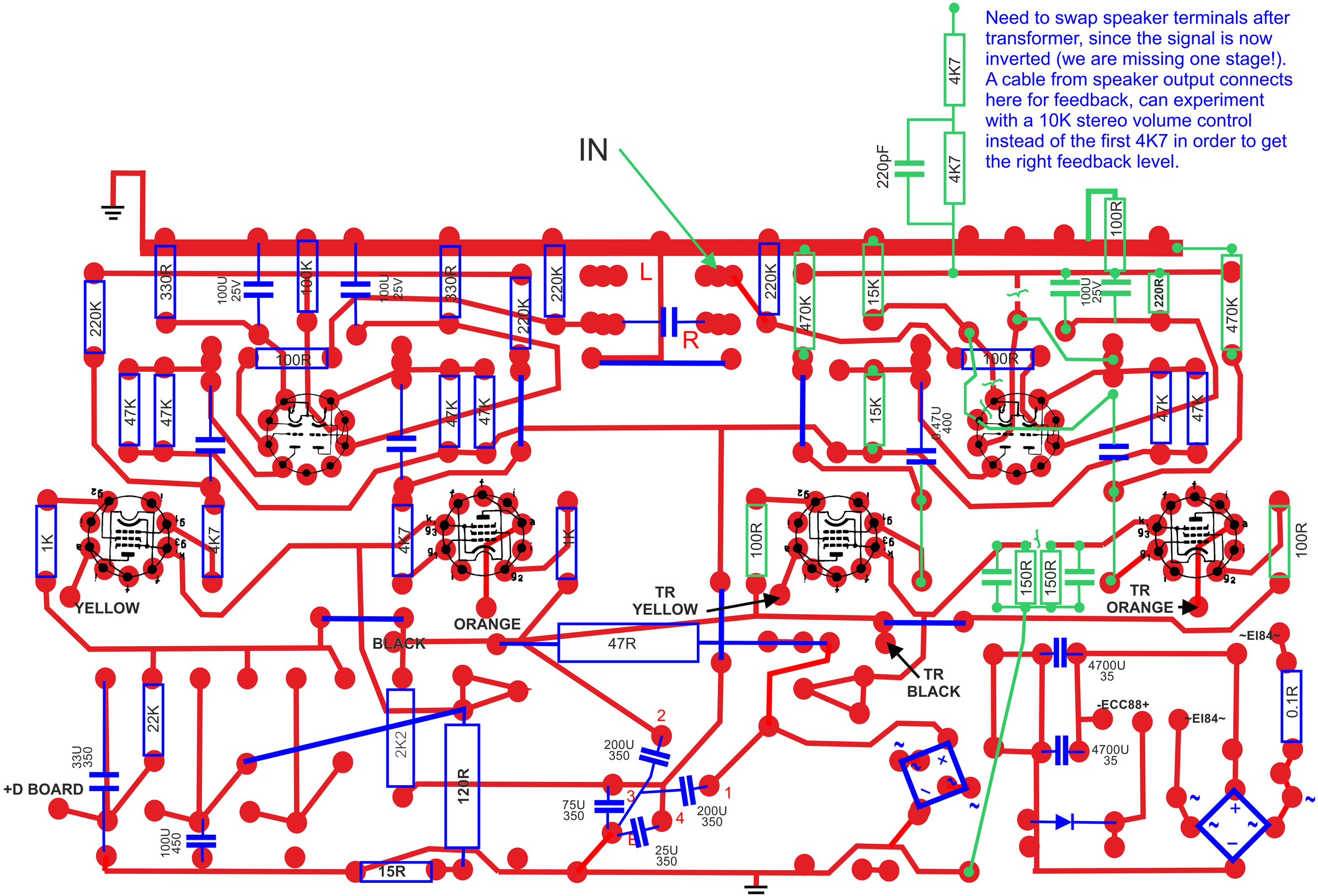
Need to swap speaker terminals after transformer, since the signal is now inverted (we are missing one stage!). A cable from speaker output connects here for feedback, can experiment with a 10K stereo volume control instead of the first 4K7 in order to get the right feedback level.
IN
L
R
220K
330R
100U 25V
100K
100R
47K
1K
4K7
220pF
470K
15K
0.47U 400
220R
150R
47R
YELLOW
ORANGE
BLACK
TR YELLOW
TR BLACK
TR ORANGE
~EI84~
-ECC88+
4700U 35
0.1R
22K
2K2
120R
15R
33U 350
+D BOARD
100U 450
200U 350
75U 350
25U 350
1
2
3
4

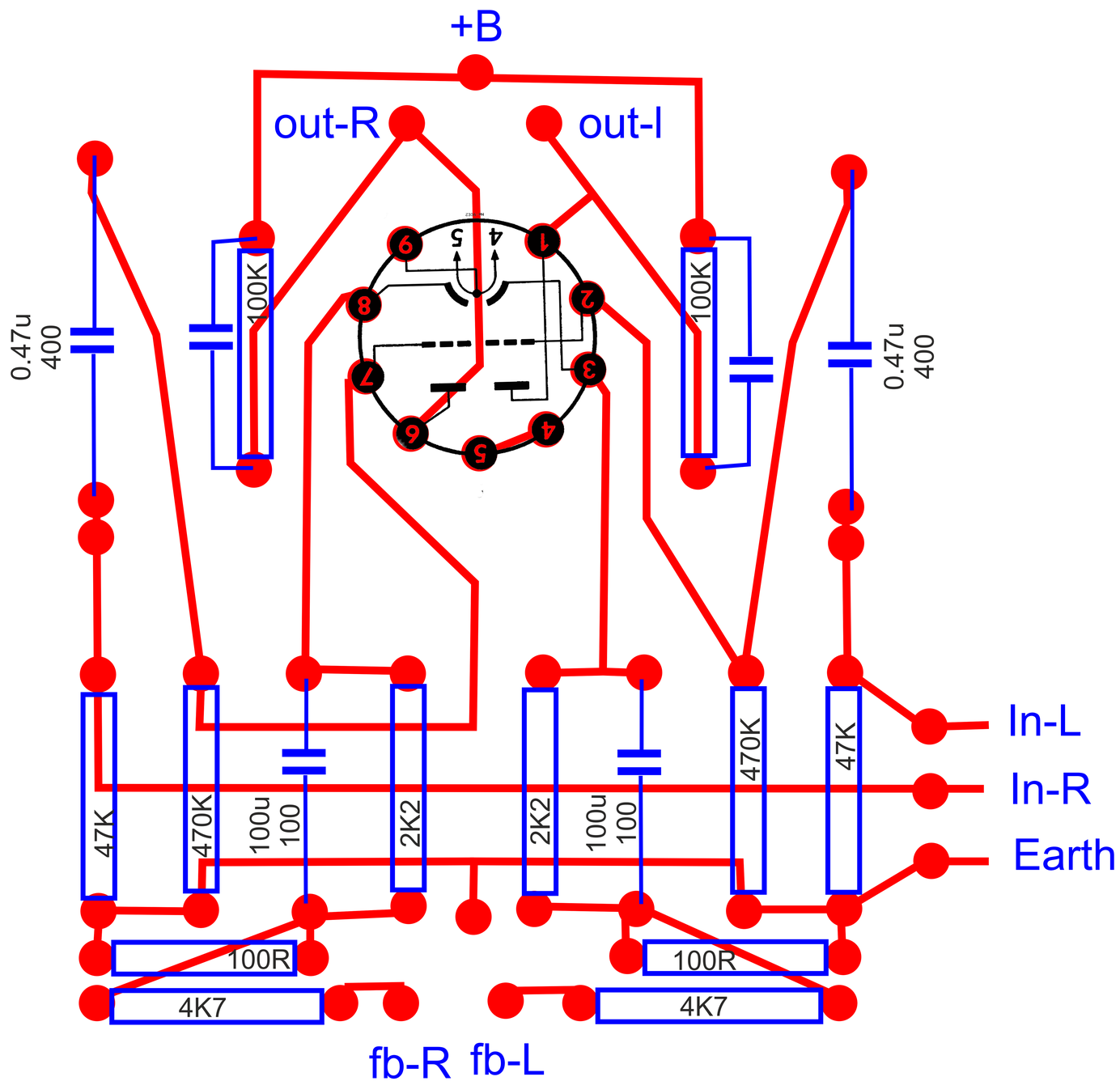
+B
out-R
out-l
0.47u
400
100K
100K
0.47u
400
47K
470K
100u
100
2K2
2K2
100u
100
470K
47K
In-L
In-R
Earth
100R
100R
4K7
4K7
fb-R
fb-L